TENUS 60 ROUND FIX

TRF 06 40 38 CL 60 ST W

Artech Tenus Round Fixed Downlight

Artech Tenus recessed architectural fixed LED downlight with ingress protection IP20. Total luminous flux up to 560 lm with overall luminaire efficacy of 87 lm/W. Supplied with fixed output, DALI digital or phase-cut dimmable driver, optional 3 -hour Basic or EMPRO emergency kit. Forged aluminum heat sink with die-cast white or black bezel

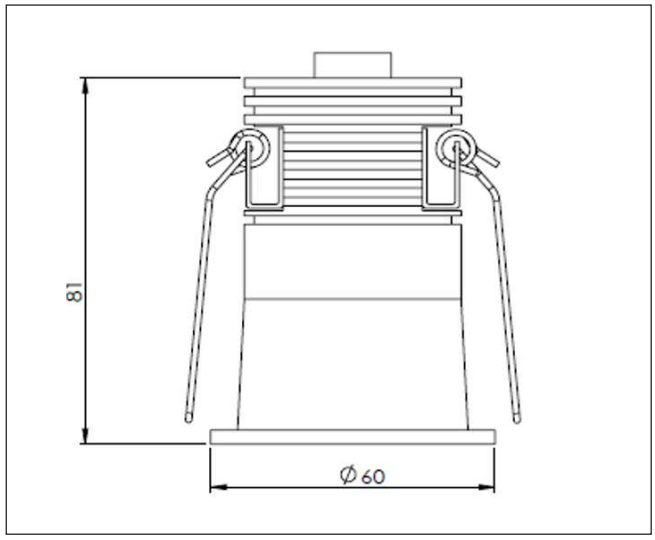

Mounting	Recessed (With Trim)
Lamp Type	LED
Wattage	6.4 W
Lumen Output	560 lm
Efficacy	87 lm/W
Colour Temperature	4000 K
CRI	80+
Beam Angle/ Optic	38˚/ Clear
IP Rating	IP20
Control Gear	Fixed Output
Dimensions	60 Dia x 81 mm
Colour Finish	White
MacAdam	3
Service Lifetime	L80/B10-55,000 Hrs

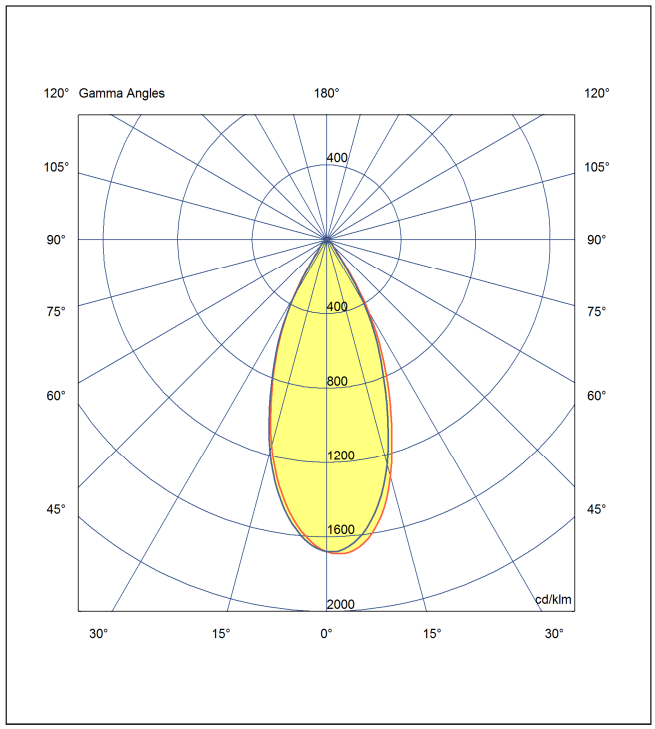

Artech lighting strives to ensure all solutions are supplied with the latest technology, we therefore reserve the right to make technical and design changes without prior notice. Electrical connected load and luminous flux are subject to initial tolerance of up +/- 10%.Colour Temperature is subject to a tolerance of +/-150 Kelvin

St.Johns Rd, Meadowfield Industrial Estate, Durham, Co. Durham, DH7 8RJ - United Kingdom | T: +44 (0) 1913787960 - F: +44 (0) 1913787909 - www.artechlighting.com

MADE IN BRITAIN