TENUS ROUND FIX

TRF 19 30 60 CL 85 ST WW

Artech Tenus Round Fixed Downlight

Artech Tenus recessed architectural fixed LED downlight with ingress protection IP44. Total luminous flux up to 1900 lm with overall luminaire efficacy of 109 lm/W. Supplied with fixed output, DALI digital or phase-cut dimmable driver, optional 3 -hour Basic or EMPRO emergency kit. Forged aluminum heat sink with die-cast white or black bezel

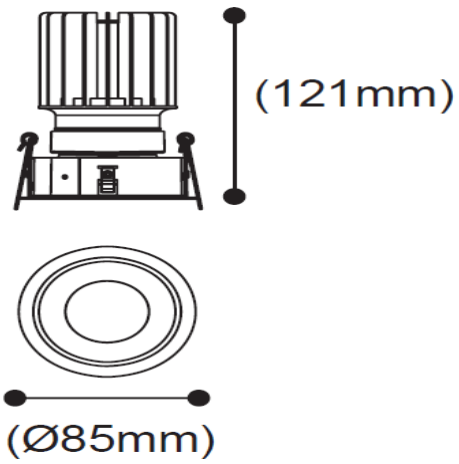

Mounting	Recessed (With Trim)
Lamp Type	LED
Wattage	17.4 W
Lumen Output	1900 lm
Efficacy	109 lm/W
Colour Temperature	3000 K
CRI	90+
Beam Angle/ Optic	60˚/ Clear
IP Rating	IP44
Control Gear	Fixed Output
Dimensions	85 Dia x 121 mm
Colour Finish	White/ White
MacAdam	3
Service Lifetime	L80/B10-55,000 Hrs

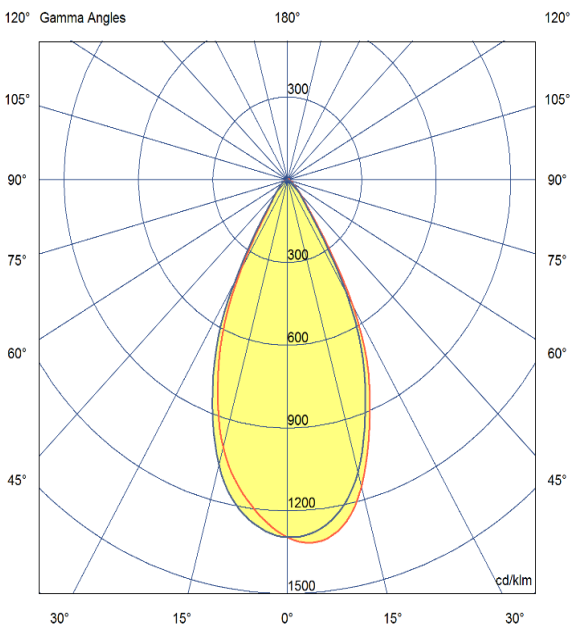

powered by

TRIDONIC

Driver details available upon request

Artech lighting strives to ensure all solutions are supplied with the latest technology, we therefore reserve the right to make technical and design changes without prior notice. Electrical connected load and luminous flux are subject to initial tolerance of up +/- 10%.Colour Temperature is subject to a tolerance of +/-150 Kelvin

St.JohnsRd,MeadowfieldIndustrialEstate,Durham,Co.Durham,DH78RJ-UnitedKingdom|T:+44(0)1913787960-F:+44(0)1913787909-www.artechlighting.com

MADE IN BRITAIN