TENUS SQUARE SNOOT

Part Code: **TSN 10 40 24 CL 321 ST WWB**

Artech Tenus recessed architectural fixed LED downlight with ingress protection IP44. Total luminous flux up to 1408 lm with overall luminaire efficacy of 109 lm/W. Supplied with fixed output, DALI digital or phase-cut dimmable driver, optional 3 -hour Basic or EMPRO emergency kit. Forged aluminium heat sink with die-cast white or black bezel.

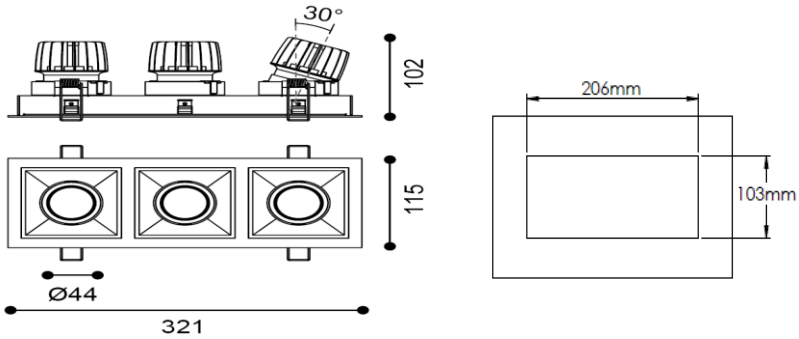

Production Information

–
Physical
Mounting Type – Recessed (With Trim)
Length – 321mm
Height – 102mm
Width – 115mm
Cutout – 206mmx103mm
Finish – White/White/Black
IP Rating – IP44

–
Electrical
Lamp Type - LED
Wattage – 3 x 9.2 W
Efficacy – 109 lm/W
Driver – Tridonic/Osram
Control – Fixed Output

–
LED
Manufacturer – Citizen
LED Type – CLU028/120C4
Delivered lumen output – 3 x 1006lm
CCT – 4000K
CRI – 80+
MacAdam – < 2
Service Lifetime – L80/B10 72,000 Hrs

–
Optic
24°/ Clear

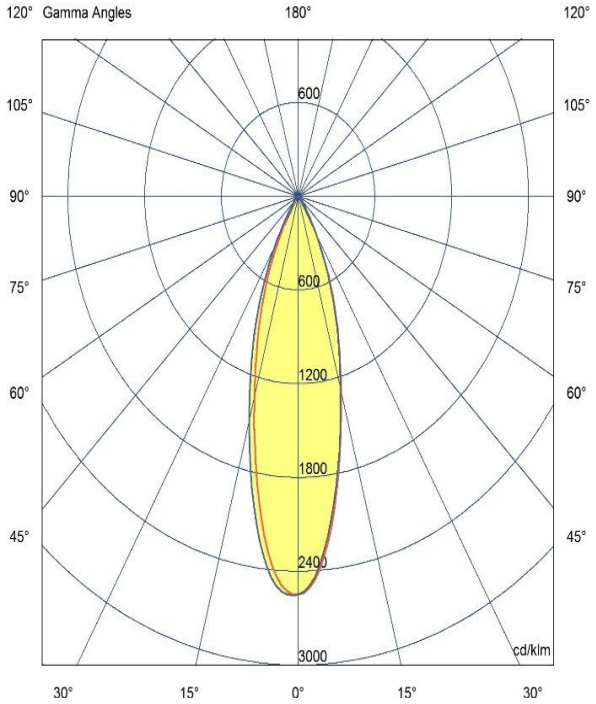

Artech lighting strives to ensure all solutions are supplied with the latest technology, we therefore reserve the right to make technical and design changes without prior notice. Electrical connected load and luminous flux are subject to initial tolerance of up +/- 10%. Colour Temperature is subject to a tolerance of +/-150 Kelvin.

St Johns Rd, Meadowfield Ind. Estate, Durham, Co. Durham, DH7 8RJ, United Kingdom
T: +44(0) 191 3787960 E: info@artechlighting.com

MADE IN BRITAIN UK CA